TYPE	OUTPUT		POLE	TIME RATING	VOLTAGE V	Hz	SYN. SPEED R. P. M
	HP.	kW.					
AEHH-GD	350	261	4	CONT.	460	60	1800

TOTALLY ENCLOSED FAN-COOLED TYPE, SQUIRREL-CAGE ROTOR

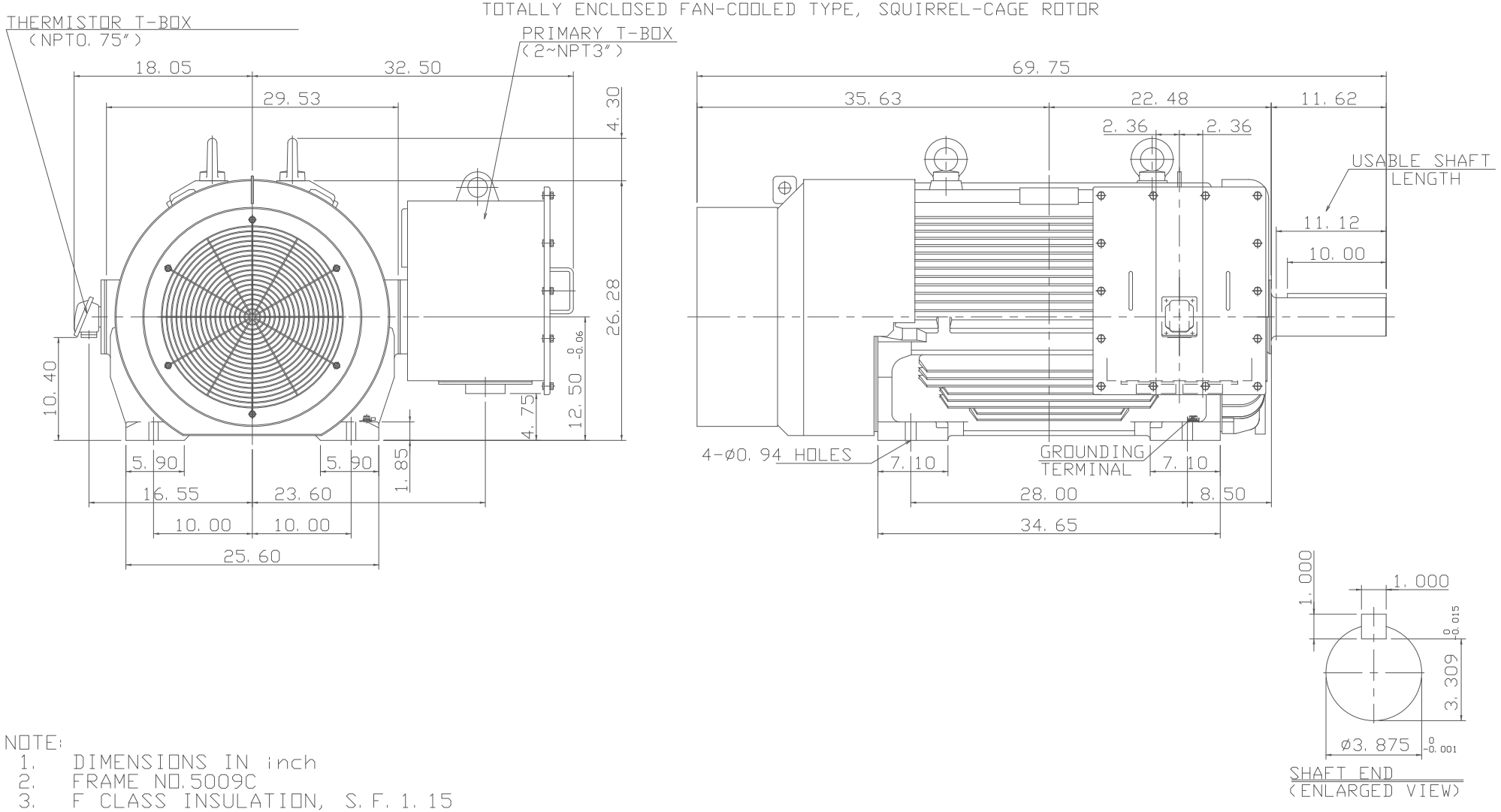

NOTE:
1. DIMENSIONS IN inch
2. FRAME NO.5009C
3. F CLASS INSULATION, S.F. 1.15
4. FOR BELT DRIVE
5. ENCLOSURE: IP55
6. BEARING SIZE: DRIVE-END NU324C3
   OPP. DRIVE-END 6320
7. NON-SPARKING FAN
8. WITH THERMISTOR: PTC 140°C 3PCS
9. MOTOR APPROX. WEIGHT: 3840lb

DWN.	C. HSIEH	MAR·29·2017
CHKD.	H. HUANG	MAR·29·2017
APPD.	C. LIU	MAR·29·2017

DATE FEB. 01, 2018

CATALOG NO.: CDP3504R

TECO Westinghouse

OUTLINE DIMENSIONS

3-PHASE INDUCTION MOTOR

DWG NO. 4B040T947 REV: 01

1/1